개정번호 REV.No	부 호 SYM.	내 용 DESCRIPTION	위 치 POSITION	채용서번호 ADOPTION SHEET NO.	일 자 DATE	수 정 REV'D	검 도 CHECKED		승 인 APP'D

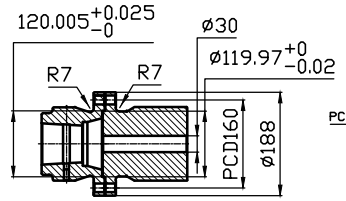

OUTPUT SHAFT COUPLING & PROPELLER COUPLING DIMENSION

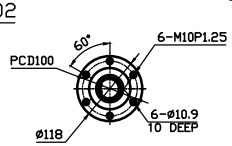

INPUT COUPLING DIMENSION

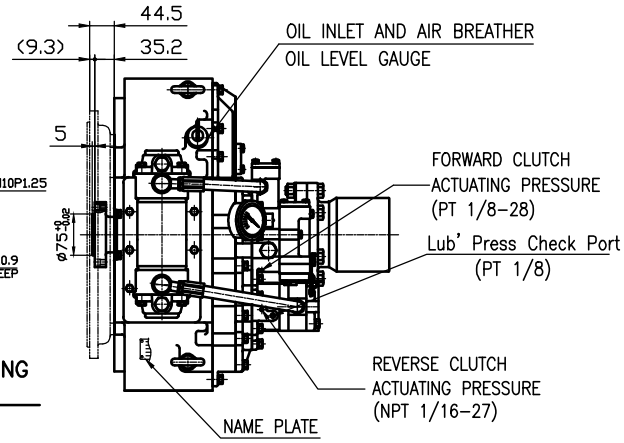

DMT 100HL MARINE TRANSMISSION SPECIFICATION			
GEAR RATIO	5.29, 5.95, 4.07, 4.50, 4.95		
TOTAL WEIGHT	APPROX. 263 kg(DRY)		
OIL CAPACITY	APPROX. 9.5L		
OIL VISCOSITY	SAE # 30		
OIL PRESSURE	1.96 ~ 2.54 MPa	CLUTCH OIL	
DIRECTION OF ROTATION IN FORWARD	INPUT	C.C.W VIEWED FROM THE STERN	
	OUTPUT	C.W VIEWED FROM THE STERN	
OIL CHANGE INTERVAL	THE FIRST 100HOURS OF INITIAL OPERATION		
	AND EVERY 1000HOURS THEREAFTER		
SHIFTING LIMIT	UNDER 50% OF THE RATED ENGINE SPEED		
OIL COOLER	WATER FLOW 40 ~ 60L/min		
	TEMPERATURE OF COOLING WATER	MAX 32°C	
OPERATING TORQUE OF SHIFTING LEVER	UNDER 2.94Nm		

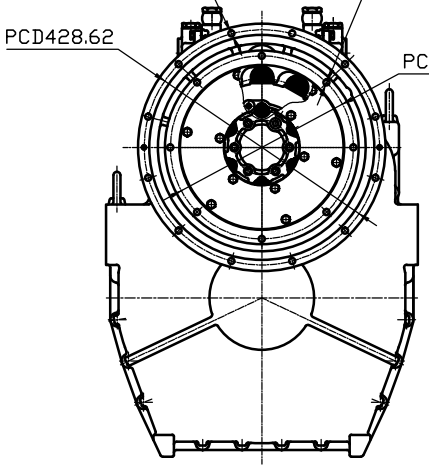

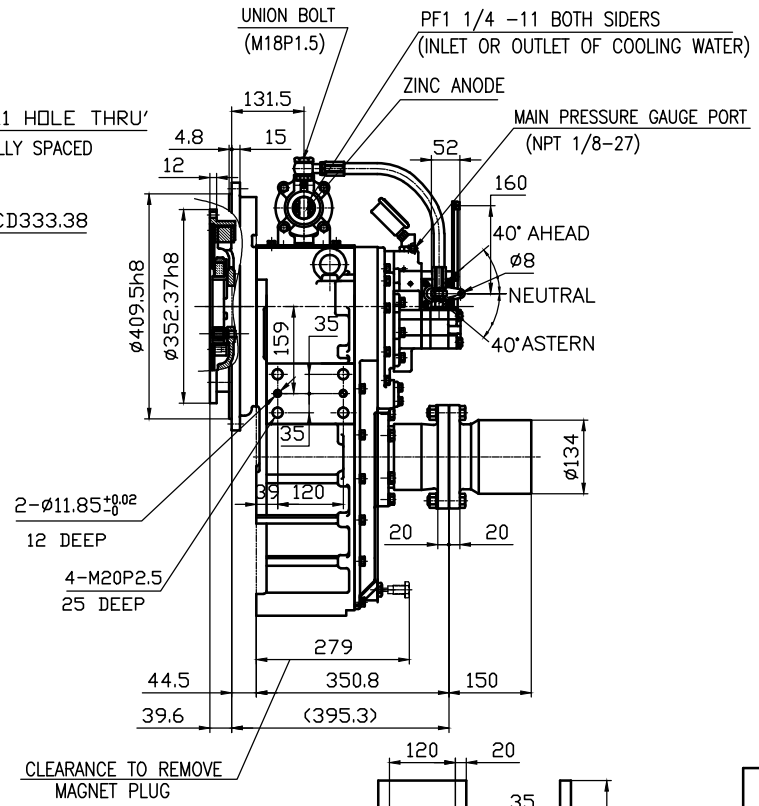

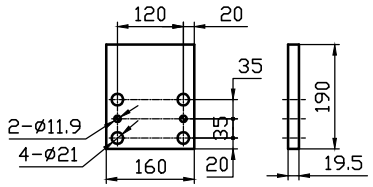

BRACKET DIMENSION

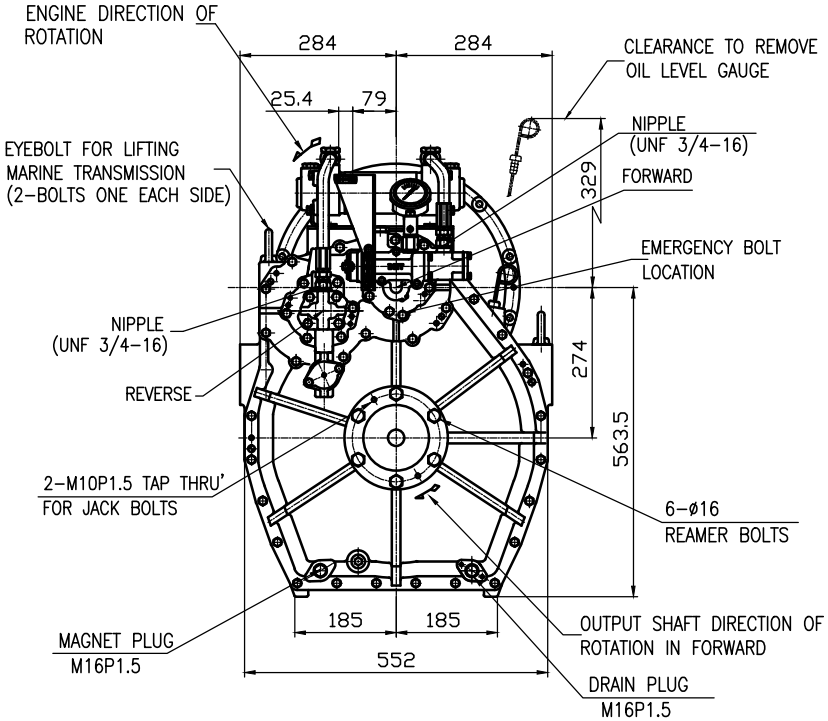

REMARK (HOT)
1.HOUSING: SAE#3
2.DRIVING RING: SAE 11.5"
3.COUPLING TYPE : DUAL STAGE
4.APPLICATION ENGINE : STANDARD

공통공차 TOLERANCE ON		
분수 FRACTIONS	소수 DECIMALS	각도 ANGLES
± —	± —	± —

절삭가공

일반공차	구분	조급	중급	정급
	1 초과 4 이하	± 0.3	± 0.1	± 0.05
	4 16	± 0.5	± 0.2	± 0.07
	16 63	± 0.7	± 0.3	± 0.1
	63 250	± 1.2	± 0.5	± 0.2
	250 1000	± 2.0	± 0.8	± 0.3

번호 NO.	품번 PART NO.	품명 PART NAME	개수 Q'TY	재질 MATERIAL	규격 SIZE	비고 REMARKS

재질 MATERIAL	—		
작성 DATE 2017.05.24	척도 SCALE N/S		
승인 APPROVED BY	검도 CHECKED BY	제도 DRAWN	설계 DESIGNED
JK.Kim	TH.Cha	TW.Kim	

형식 TYPE	DMT100HL
원도번 ORIGINAL DWG. NO.	
품명 NAME	MARINE TRANSMISSION
도번 DWG. NO.	10000GHA~E-3115DCH
개정(REV.)	000
크기 SIZE	A3
코드번호 CODE ID. NO.	

D-I INDUSTRIAL

SHEET 1 OF 1
동아기술-004(841×594)